mindman MP43 Series CE

For your safety, please read the following before using.

① Do not use corrosive or flammable gas or liquid with this product.
② Please use within the rating pressure range. Do not apply pressure beyond recommended maximum withstand pressure, permanent damage to the pressure sensor may occur.
③ Do not drop, hit or allow excessive shock. Even if switch body appears undamaged, internal components may be broken and can cause malfunction.
④ Turn power off before connecting wiring. Wrong wiring or short circuit will damage and / or cause malfunction.
⑤ Do not use in environment containing steam or oil vapor.
⑥ This product is not explosion-proof rated. Do not use in atmosphere containing flammable or explosive gases.
⑦ Wiring for pressure sensor should avoid power source line and high voltage line. If use in the same circuit, noise may cause malfunction.

A. SPECIFICATIONS

TYPE		MP43P□-□ (Positive)	MP43V□-□ (Vacuum)	MP43C□-□ (Compound)
Rated pressure range		0.000~1.000MPa	0.0~101.3kPa	-100.0~100.0kPa
Setting pressure range		-0.100~1.000MPa	10.0~101.3kPa	-101.0~101.0kPa
Withstand pressure		1.5MPa	300kPa	
Fluid		Filtered air, Non-corrosive / Non-flammable gas		
Set pressure resolution	kPa	—	0.1	
	MPa	0.001	—	
	kgf/cm²	0.01	0.001	
	bar	0.01	0.001	
	psi	0.1	0.01	
	inHg	—	0.1	
	mmHg	—	1	
Power supply voltage		12 to 24V DC ±10%, Ripple (P-P) 10% or less		
Current consumption		≤ 40mA (With no load)		
Switch output		NPN: open collector 2 outputs Max. load current: 125mA Max. supply voltage: 30V DC Residual voltage: ≤ 1.5V	PNP: open collector 2 outputs Max. load current: 125mA Max. supply voltage: 24V DC Residual voltage: ≤ 1.5V	
Repeatability(Switch output)		±0.2% F.S. ±1 digit		
Hysteresis	One point set mode	Adjustable(*1)		
	Hysteresis mode			
	Window comparator mode			
Response time		≤2.5ms (chattering-proof function: 25ms, 100ms, 250ms, 500ms, 1000ms and 1500ms selectable)		
Output short circuit protection		Yes		
7 segment LCD display		Two color(Red/Green) main & unit display, Orange sub-display (Sampling rate: 3 times/sec.)		
Indicator accuracy		±2% F.S. ±1 digit (ambient temperature: 25 ±3°C)		
Switch ON Indicator		Orange (1 & 2 indicator) OUT1 OUT 2		
Analog output (Voltage Output) *2		Output Voltage: 1 to 5V ±2.5% F.S. (within rated pressure range) Linearity: ±1% F.S. Output impedance: about 1kΩ		
Analog output (Current Output) *3		Output Current: 4 to 20mA ±2.5% F.S. (within rated pressure range) Linearity: ±1% F.S. Max. Load impedance: 300Ω at power supply of 12V 600Ω at power supply of 24V Min. Load impedance: 50Ω		
Environment	Enclosure	IP 40		
	Ambient temp. Range	Operation: 0~50°C, Storage: -10~60°C (No condensation or freezing)		
	Ambient humidity range	Operation/Storage: 35~85% RH (No condensation)		
	Withstand voltage	1500V AC in 1-min (between case and lead wire)		
	Insulation resistance	50MΩ (at 500V DC, between case and lead wire)		
	Vibration	Total amplitude 1.5mm or 10G, 10Hz~55Hz~10Hz sweep for 1 minute, each hours each direction of X, Y and Z		
	Shock	100m/s² (10G), 3 times each in direction of X, Y and Z		
Temperature characteristic		±2.5% F.S. of detected pressure (25°C) at temp. Range of 0~50°C		
Port size		F1: R1/8", M5; F2: NPT1/8", #10-32UNF; F3: G1/8"(BSPP), M5		
Lead wire		Oil-resistance cable(0.15mm²)		
Weight		Approx. 80g (with 2 meter lead wire)		

*1. Hysteresis value is adjustable within 1 ~ 8 digits for one point set mode and window comparator mode.
*2. If analog voltage output is selected, the analog current output cannot be selected at the same time.
*3. If analog current output is selected, the analog voltage output cannot be selected at the same time.

B. OUTPUT CIRCUIT WIRING DIAGRAMS

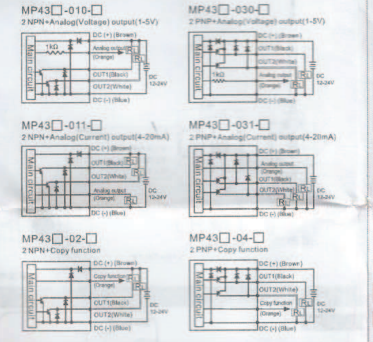

C. ORDERING INFORMATION

M P 4 3 C - 0 1 0 - F 1

Pressure Range

C : Compound (-101.0~101.0kPa)
V : Vacuum (10.0~-101.3kPa)
P : Positive (-0.100~1.000MPa)

Output Specifications

010 : 2 NPN+Analog (Voltage) output (1 - 5V)
011 : 2 NPN+Analog (Current) output (4 - 20mA)
02 : 2 NPN+Copy function
030 : 2 PNP+Analog (Voltage) output (1 - 5V)
031 : 2 PNP+Analog (Current) output (4 - 20mA)
04 : 2 PNP+Copy function

Pressure Port

F1 : R1/8", M5
F2 : NPT1/8", #10-32UNF
F3 : G1/8"(BSPP), M5

Optional Parts

MP-A12 : Mounting bracket (BT-12)
MP-A13 : Mounting bracket (BT-13)
MP-B2 : Panel adapter (PA-C)
MP-C2 : Panel adapter + Front protective lid (PA-D)

D. PANEL DESCRIPTION

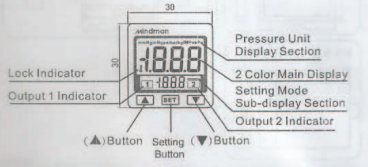

E. DIMENSIONS

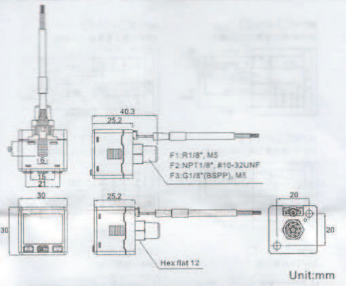

F. OPTIONAL PARTS DIMENSIONS

① Mounting bracket

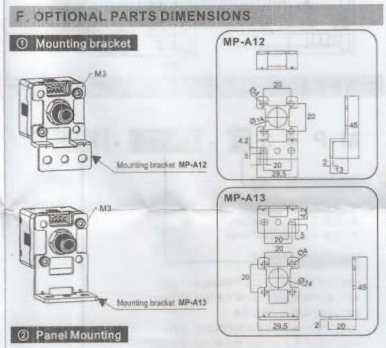

② Panel Mounting

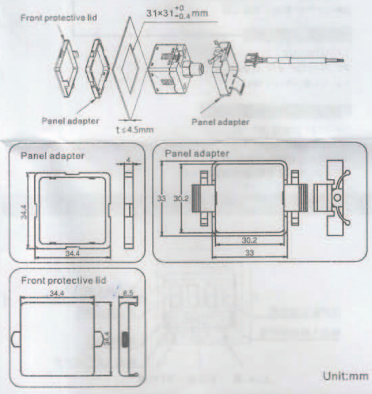

G. INITIAL SETTING MODE

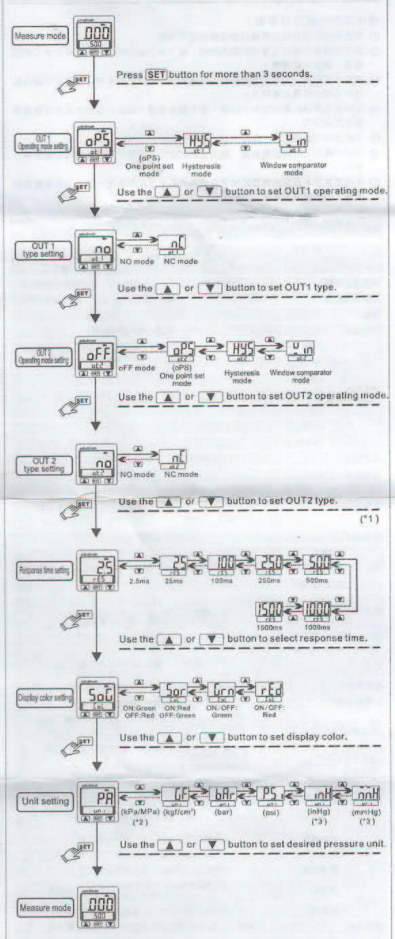

【NOTE:】
*1. This setting mode will not display when output 2 is set to oFF.
*2. Pressure unit is MPa by positive & pressure unit is kPa by vacuum and compound
*3. Only applicable for Vacuum/Compound.

H. ADVANCE SETTING MODE

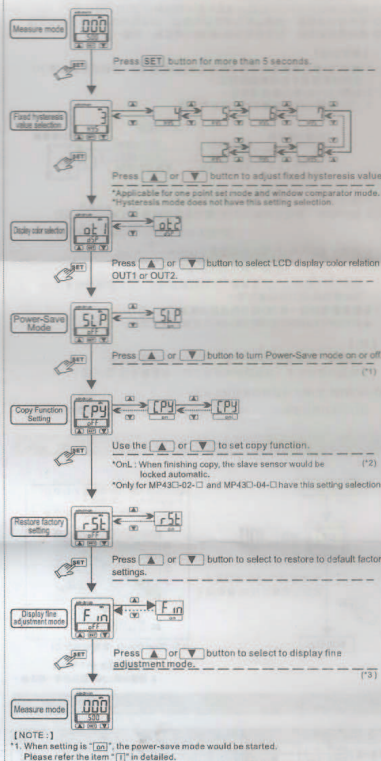

【NOTE:】
*1. When setting is "on", the power-save mode would be started. Please refer the item "I" in detailed.
*2. when setting "cpL" or "cpE", the display copy function mode would be started. Please refer the item "P" in detailed.
*3. When setting is "em", the display fine adjustment mode would be started. Please refer the item "Q" in detailed.

I. POWER-SAVE MODE

◎ During Power-Save mode, the main display will turned off if no buttons is pressed after 30 seconds.
◎ During Power-Save mode, the output LCD may not be synchronize with the output. It is normal and will not affect output operation.
◎ Press any button to turn-on main display temporarily.

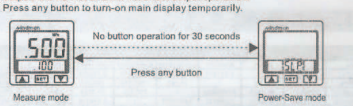

(Main display is off, sub-display will flash "SLP")

J. PRESSURE SETTING MODE

◎ Setting Condition 1:
OUT 1 mode setting:
"oPS" (One point set mode)
OUT 2 mode setting:
"oFF" (Not used)

◎ Setting Condition 2:
OUT 1 mode setting:
"oPS" (One point set mode)
OUT 2 mode setting:
"oPS" (One point set mode)

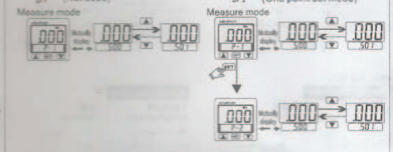

◎ Setting Condition 3:
OUT 1 mode setting:
"oPS" (One point set mode)
OUT 2 mode setting:
"HYS" (Hysteresis mode)
"Win" (Window comparator mode)

◎ Setting Condition 4:
OUT 1 mode setting:
"HYS" (Hysteresis mode)
"Win" (Window comparator mode)
OUT 2 mode setting:
"oFF" (Not used)

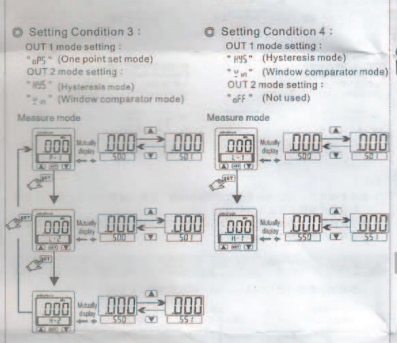

◎ Setting Condition 5:
OUT 1 mode setting:
"HYS" (Hysteresis mode)
"Win" (Window comparator mode)
OUT 2 mode setting:
"oPS" (One point set mode)

◎ Setting Condition 6:
OUT 1 mode setting:
"HYS" (Hysteresis mode)
"Win" (Window comparator mode)
OUT 2 mode setting:
"HYS" (Hysteresis mode)
"Win" (Window comparator mode)

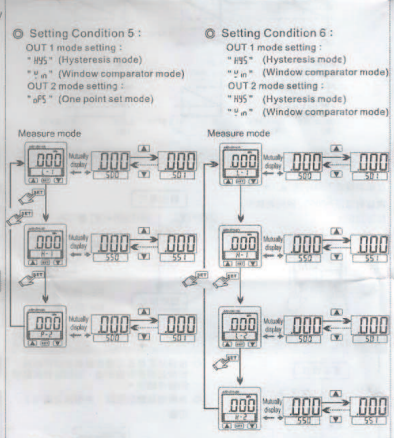

【NOTE:】
Do not disconnect power when the sub-display and setting value is flashing alternately; otherwise the system cannot store the values.

K. OUTPUT TYPE

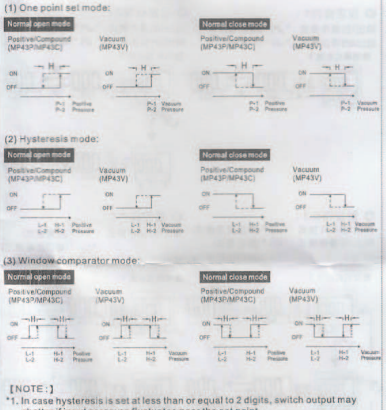

【NOTE:】
*1. In case hysteresis is set at less than or equal to 2 digits, switch output may chatter if input pressure fluctuates near the set point.
*2. When using window comparator mode, the difference between two set points must be greater than the fixed hysteresis, otherwise will cause the switch output to malfunction.

L. ANALOG OUTPUT DESCRIPTION

Analog output range 1-5V or 4-20mA, proportional to the pressure range.

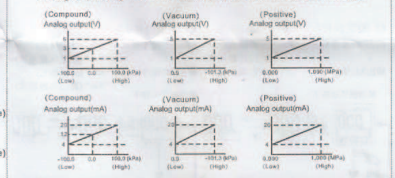

M. ZERO POINT SETTING

Press the ▲ + ▼ button at the same time until the "00" is shown.
Release the button to end zero setting.

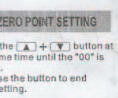

N. PEAK/BOTTOM HOLD FUNCTION

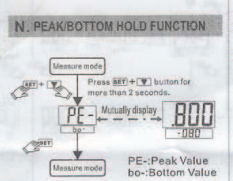

PE-:Peak Value
bo-:Bottom Value

O. KEY LOCK/UNLOCK MODE

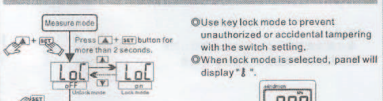

◎Use key lock mode to prevent unauthorized or accidental tampering with the switch setting.
◎When lock mode is selected, panel will display "Lo".

P. COPY FUNCTION SETTING

◎ Copy function setting can use the master sensor to copy the pressure value to the slave sensors.
◎ Before copying, please confirm the model of pressure sensor. The function cannot use in difference mode.
◎ The copy function only can be one-to-one.

【SETTING STEP】
1. Please set the copy function to on or onL to be on copy condition by master sensor. Please refer the copy setting of (H) advance setting mode.
2. Turn power off by slave sensor.
3. Refer the connection way with the master and slaver sensor as followings.

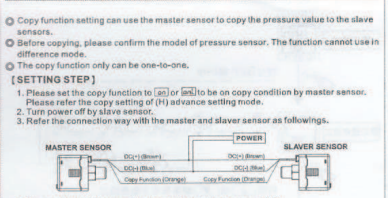

4. Turn on power at the same time by master and slaver sensor.(* 1)
5. Wait 5 sec., when finishing to convey the data, the master sensor display (mutually display) CPY → End; the slaver sensor display (mutually display) Slv → End (display reciprocal)
6. When convey the data is fail, (Master) sensor displays CPY → Err (display reciprocal) (Slaver) sensor displays Err (* 2)
7. Turn off power and remove the wire connection. If no remove the wire connection, the sensor would be broken.

★If require to copy another slave sensor, please repeat the step ⑥ to ⑦.
★Only for MP43□-02-□ and MP43□-04-□ have this setting selection.

【NOTE】
*1. If turn on power is not synchronization, the data cannot be copied.
*2. When the data conveys fail, please confirm the wire connection. Then repeat the step ⑥ to ⑦.

How to cancel the copy mode by master sensor:
◎ When the master sensor display CPY ⇄ End (display reciprocal).
Please ▼ button to leave the copy mode.

Q. FINE ADJUSTMENT MODE

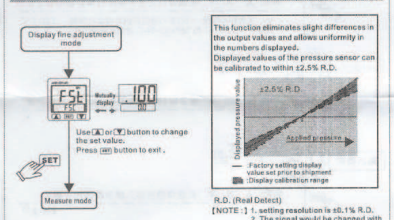

R.D. (Real Detect)
【NOTE:】 1. setting resolution is ±0.1% R.D.
2. The signal would be changed with analog output after adjusting.

R. ERROR CODE INSTRUCTION

Error Type	Display	Error Condition	Troubleshooting
Excess load current error	Er1	Output 1 load current is more than 125 mA.	Turn power off and check the cause of overload current or lower the current load under 125 mA. then restart.
	Er2	Output 2 load current is more than 125 mA.	
Residual pressure error	Er3	During zero reset, ambient pressure is over ±3% F.S.	Change input pressure to ambient pressure and perform zero reset again.
Applied pressure error	HHH	Supply pressure is exceeds the upper limit of pressure setting.	Adjust the pressure within operating pressure range.
	LLL	Supply pressure is exceeds the lower limit of pressure setting.	
System error	Er4	Internal system error	Turn power off, and then restart. If error condition remains, please return to factory for inspection.
	Er5	Internal system error	
	Er6	Internal data error	
	Er7	Internal data error	
Copy data error	Er8	Please check the model no. and wire connection. Restart to turn on power if no return to normal condition, please return to factory for inspection.	

S. PRESSURE UNIT CONVERSION TABLE

From \ To	Pa	kPa	MPa	kgf/cm²	mmHg	mmAq	bar	psi
1 Pa	1	0.001	0.000001	10.2000101	0.007500 2	0.0984252	0.00001	0.0001453
1 kPa	1000.000	1	0.001000	0.010197	7.500616	6.145038	0.010000	0.2953
1 MPa	1000000	1000	1	10.197	7500.616	145.038	10	291.2598
1 kgf/cm²	98066.5	98.0665	0.0980665	1	735.559	14.2233	0.0980665	28.96678
1 mmHg	133.32	0.13332	0.000133	0.0013595	1	0.019336	0.0013332	0.035370
1 mAq	6895	6.895	0.006895	0.07031	51.7157	1	0.06895	2.036074
1 bar	100000.0	100.0000	0.100000	1.01972	750.062	14.2233	0.100000	29.52998
1 mPa	3350.388	3.350388	0.003350	0.034316	25.40000	0.491141	0.033853	